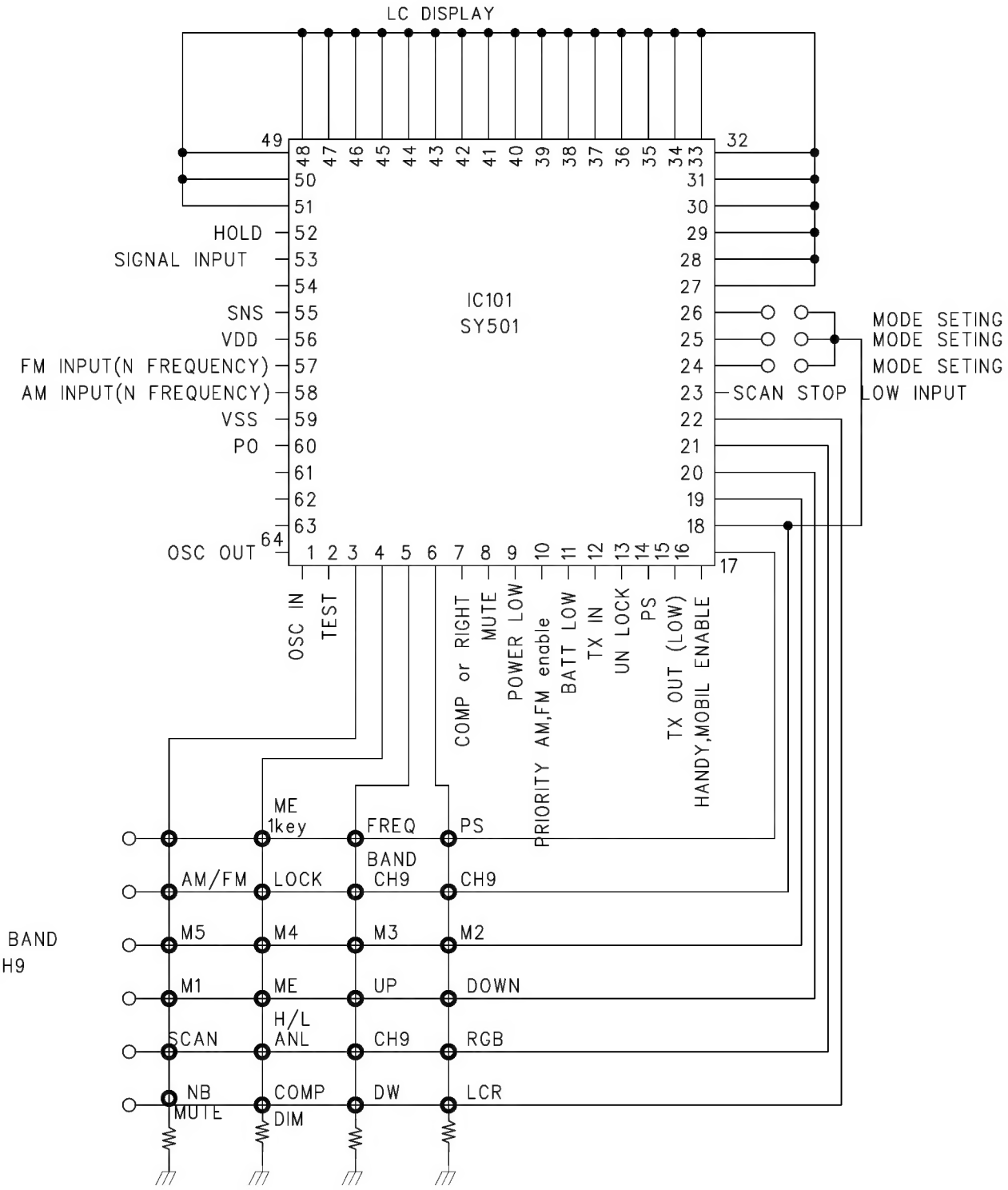

MDDE SETING CHART

24	25	26	FREQUENCY
L	L	L	BZT
L	L	H	POL 120 CH
L	H	L	UK 80CH
H	L	L	43MHz(24,224CH)
L	H	H	POL 240 CH
H	H	L	400CH
H	L	H	240 CH
H	H	H	40 CH

L – OPEN
H – SHORT

* NOTE *

CH9/BAND – EXTENDED BAND
– STANDARD CH9

CH9 – STANDARD CH